DEVELOPING THE CIVIL NUCLEAR POWER SUPPLY CHAIN

Project: 102068

Project Title:
Fabrication and Erection of Steel Concrete (SC) Modular Construction for Nuclear Power Plant (NPP)

October 2016

Background

This is an R&D project funded by the Department of Energy and Climate Change and the Nuclear Decommissioning Authority, through Innovate UK. Its focus is to develop the very latest in second generation SC (steel-concrete) modular construction using Modular Walling Systems'(MWS) STEEL BRICK™ system as the basis for design.

Caunton Engineering Limited (CEL) and The Steel Construction Institute (SCI) are the key partners in the project which is developing this technology from design analysis and physical testing through to realistic scale fabrication and construction trials. The target market is the civil nuclear power plant (NPP) sector.

The Market

The World Nuclear Association (2014) estimates there are 73 NPPs under construction, 172 planned and 309 proposed to deliver around 602GWe by 2030. The numbers are based on large (>1.0GWe) reactors (LR). There are also over 20 SMR designs at various stages of development or licencing. Assuming SMRs can supply a third of the total, there would be around 850 SMRs (225MWe average power) and 350 LR (1.1GWe average power).

A nuclear power plant (large) is estimated to contain circa 8,000 tonnes of 'SC' panels within it. In 2011, 61 NPPs were under construction, 154 were on order and 343 were being proposed. If we discount ones under construction and on order or planned the potential future market for Steelbricks (which replace traditional SC panels) would be in the region of 2.74m tonnes.

However, figures that we have obtained from within a leading SC reactor supplier indicate that the SMR market within China and the USA alone is US$1.25 trillion. As SMR's can really only be built using SC construction methods this represents a significant opportunity.

Traditional NPP Construction

There are numerous challenges with traditional methods of construction of NPPs. Their construction is notoriously slow and involves huge levels of onsite labour. The construction is sequential and few gains can be made by working in parallel to reduce the programme. As finance costs are high any reduction in this time is very beneficial to the operators. As the photograph shows the intensity of rebar in traditional concrete NPPs is both difficult to construct and makes concrete flow very challenging. It is virtually a steel wall of rebar.

SC Construction

There are inherent benefits in SC construction over traditional methods:-

- SC construction lends itself to modularisation.
- Work can take place off the critical path at the same time as work progresses on the job site.
- Sub modules can be fabricated off site in a controlled environment then brought together on site ensuring consistent quality and saving valuable time on site.

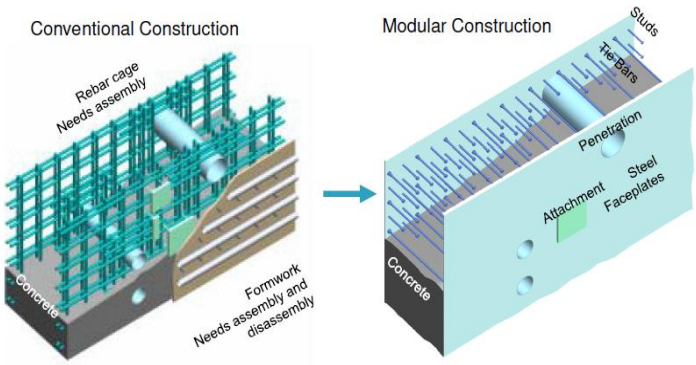

Significant program benefits are gained

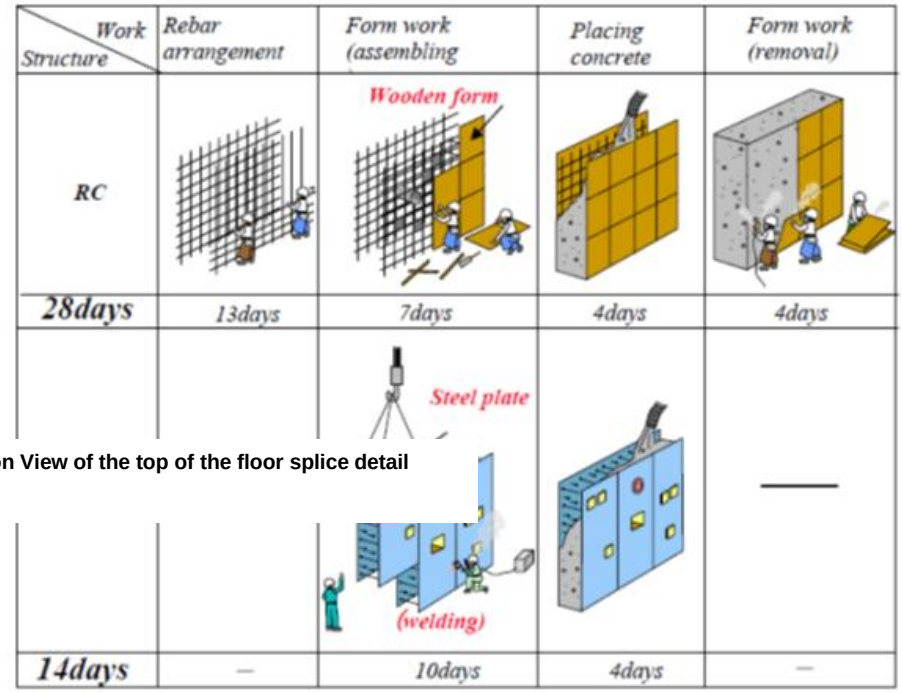

Section View of the top of the floor splice detail

However, first generation SC construction does have its own challenges. There are two current approaches. One is where SC modules are assembled from steel plates stiffened with longitudinal angles and tied together with channel sections. Longitudinal shear is resisted by the angles and shear studs. This solution has many sub components within it and issues arise from internal "overcrowding" within the panels that restricts ease of access for welding and of course inhibits concrete flow. The additional rebar placed inside can clash with subsequent panels.

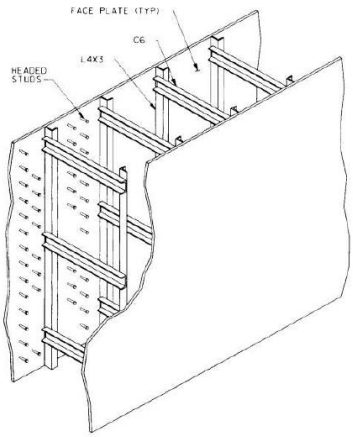

The second popular solution comprises SC Modules assembled from steel plates held together by tie bars. Longitudinal shear and local buckling is resisted by tie bars and shear studs. Again though the quantity of tie bars makes internal welding a challenge.

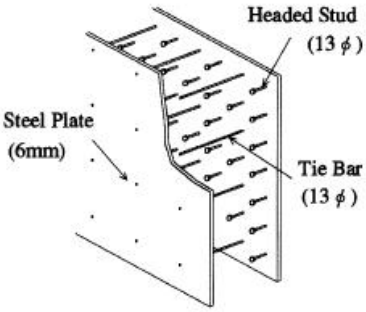

Steelbricks offers a far simpler and effective solution:-

- The welding takes place externally with no need for operators to be inside the panels
- The number of sub components is vastly reduced
- The design enables better concrete flow

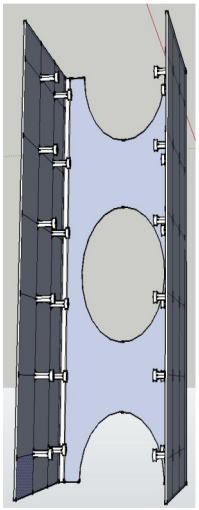

One brick

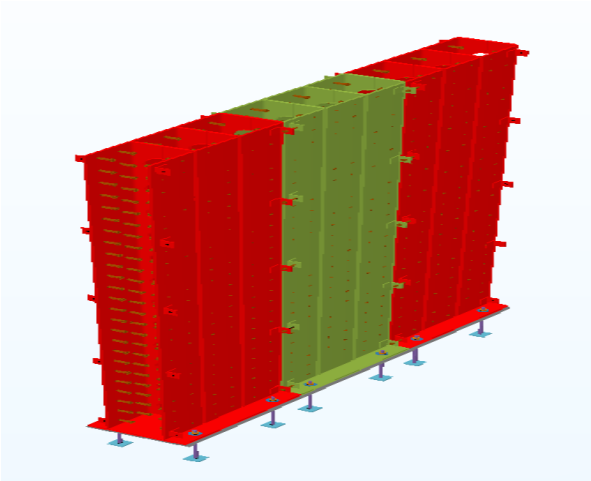

Typical wall panel

The Project

The project comprises 15 separate Workpages and started in June 2015.

This newsletter seeks to provide an update as to work undertaken and milestones reached to inform interested parties of progress.

WP 1 – Basis of design and structural design method statement

- SCI obtained and acknowledges the help of EDF in using their Diesel Ultime Secours (DUS) building as the basis of design.

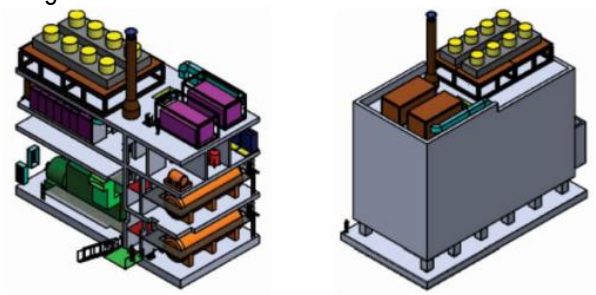

Figure 1 Schematic of DUS building

- Defined the range of design requirements
- Identified the actions (permanent, variable and accidental) which must be considered in the design
- Defined the limit states that must be considered and the combinations of actions (and their corresponding factors) for which the building must be checked
- Identified a range of Steelbrick geometries from which the final design of the building will be selected

WP 2 – Preparation of a preliminary design of the DUS

- Describes the global modelling in 3D and finite element methodology leading to the derivation of the plate thicknesses of the Steelbrick elements used in the design of the DUS
- Describes methodology for derivation of mechanical effective properties for composite elements used in the finite element analysis code
- Defines the soil structure interaction model. Choice of soil type, from a sensitivity study using raft base reactions.
- Describes the main assumptions and methodology for modal and seismic spectral analysis
- Presents finite analysis results in terms of nodal von-Mises stresses for each action
- Describes the methodology for the calculation of plate thickness using the forces and moments from the results of the finite element analysis

WP 3 – Manufacturing trials to optimise technology

- Trials were conducted on the sample ranges of plate thickness to:
- Assess the properties of different grades of steel pre and post weld and pre and post bending
- Define the maximum length of plates of varying thicknesses that can be bent using currently available equipment (i.e. non-proprietary / bespoke made tools)

- Established the achievable radius at bent corners for various plate thicknesses and compared these with the code restrictions on welding to cold formed corners
- Identified the weld procedures to be used for the trials, including developing new procedures to test for suitability
- Created 3D models of various plate thickness and corner radii to assess practical fit-up and actual dimensions for modules

WP 4 – Additional Erection Trials & Site Activities - On site assembly and welding trials

- Trial components fabricated for each joint configuration:-

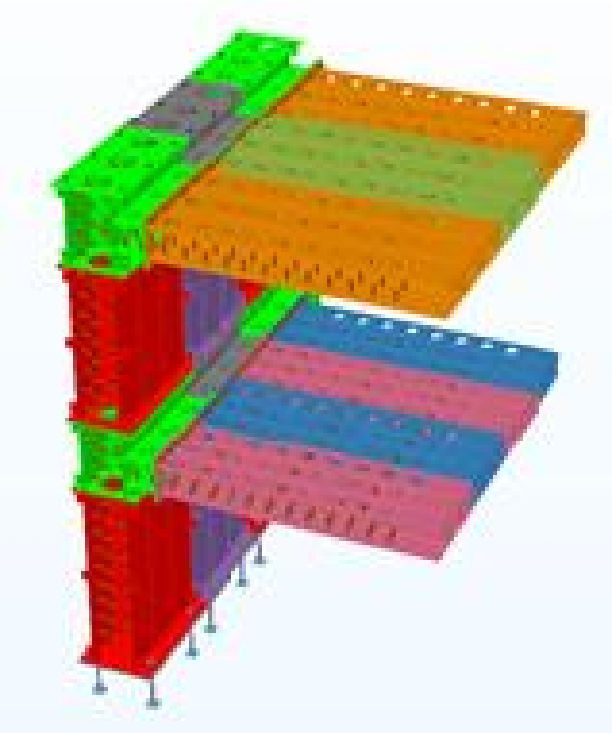

Floor to wall connection

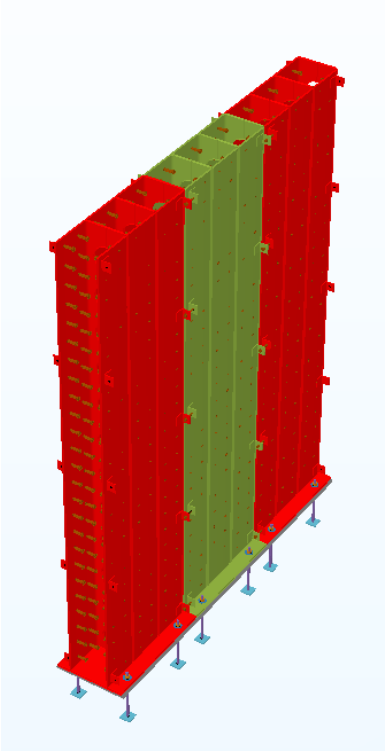

Wall to Wall connection

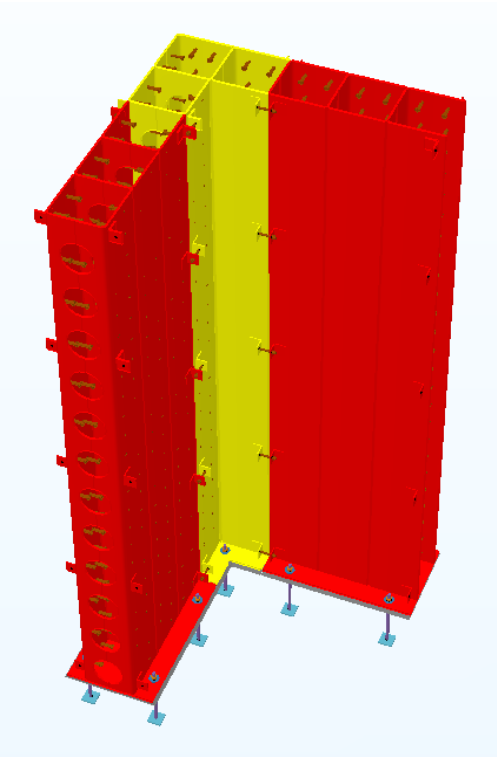

Corner Joint Type 1

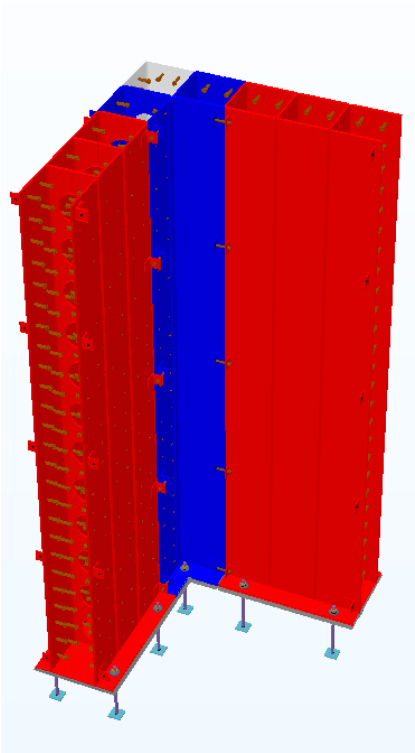

Corner Joint Type 2

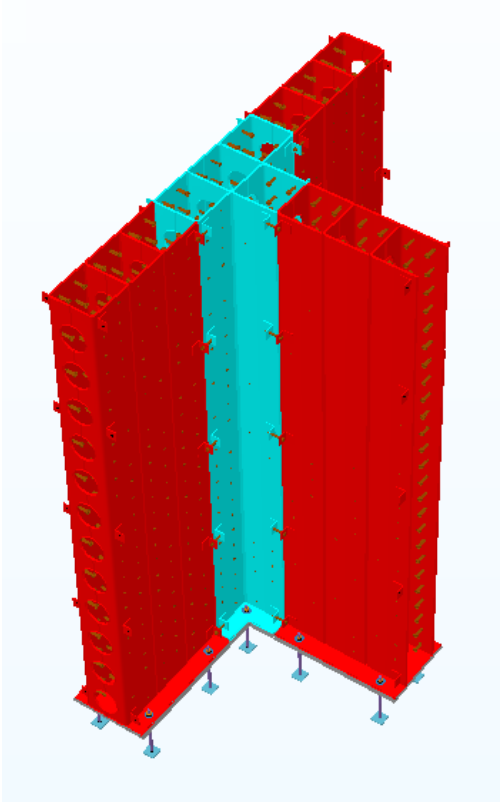

Wall to Wall Tee Section

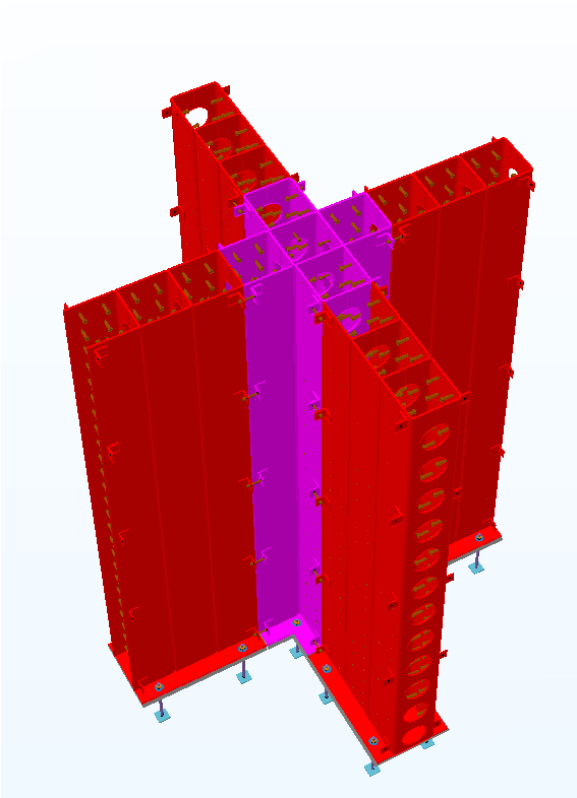

Wall to Wall Cross Section

In shop fabrication samples

We decided to design and manufacture a sample structure consisting of two walls and floor section for site fit up and concrete flow testing.

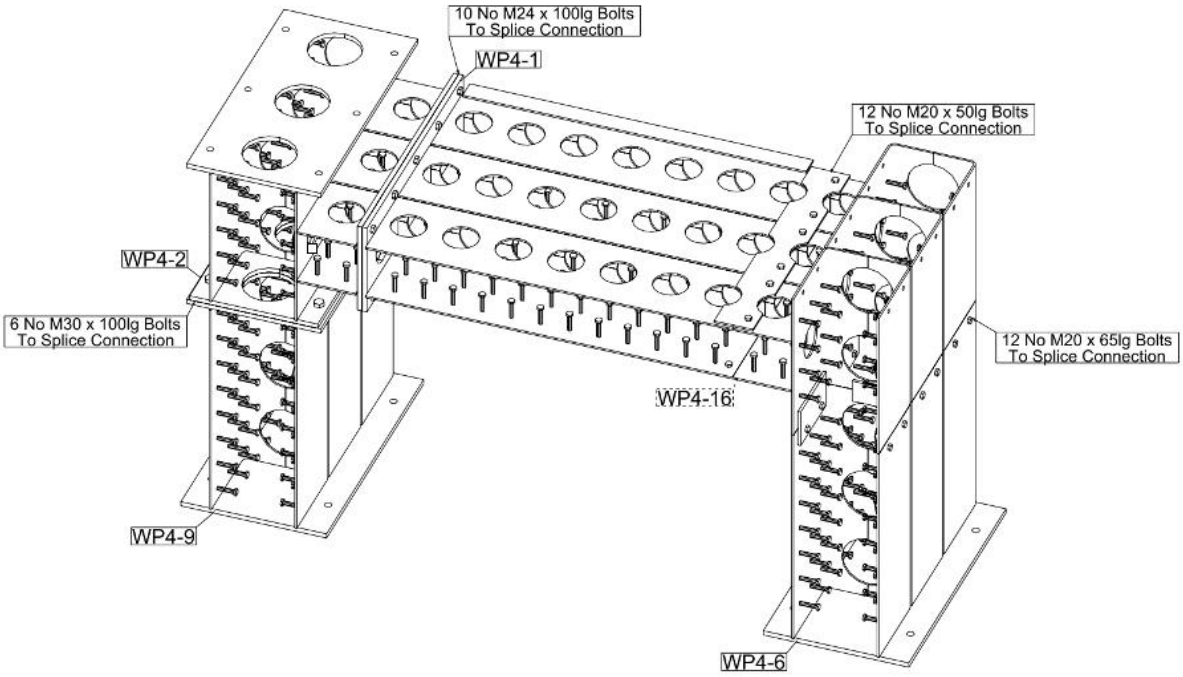

3D VIEW ON FLOOR ASSEMBLY - CONCRETE TEST PIECE

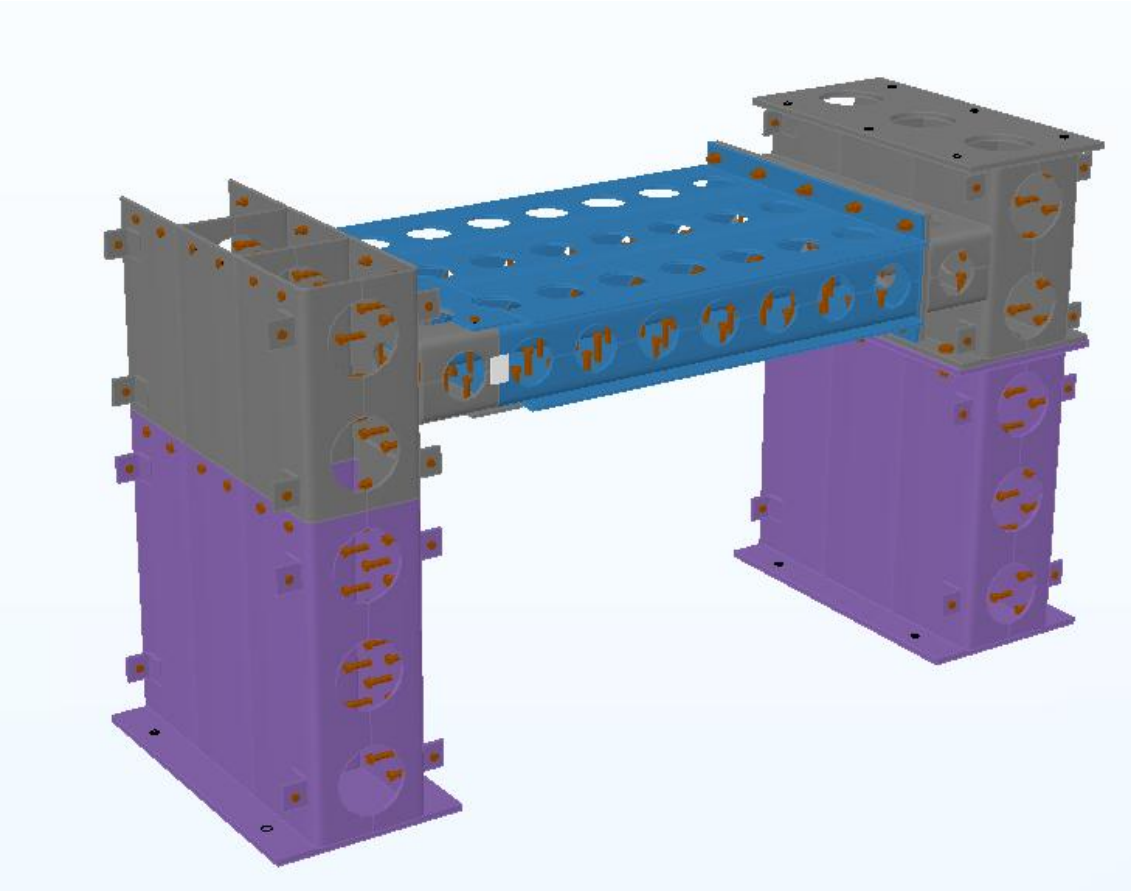

Site fit up and Site Welding

Two sets of four various wall sections were laid out roughly abutting each other in order to trial joining methodology and welding techniques.

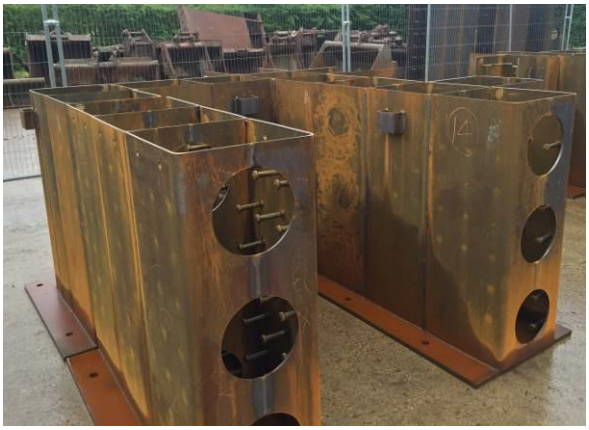

WP 6 - Design concrete mixes suitable for use in SC construction - SCI

Investigation into the most appropriate concrete mixes for use in SC structures for speed and quality

- Look at mix requirements within the specification scope: the strength and durability; consistency and retention
- Robust design requirements: segregation limits explored focusing on high levels of cement replacements
- Investigate the material selection: choice of cement; cement replacements, aggregates and admixtures. Check for compatibility, availability and storage on site
- Look at handling and placing: mixing efficiencies, pump ability (types of pump, line lengths, line logistics)
- Thermal dynamics: heat generation against programme timescale
- Concrete movement such as shrinkage and creep
- Degree of compaction and surface finish; rate of bleed and consideration given to sand runs

WP 6 – Perform concreting trials on panels, sub-assemblies, independent university testing - CEL

Manufacture individual components and run a series of test pours

- Construction of a trial structure that comprises all the previously modelled joint configurations
- Inclusion of removable inspection plates to assess concrete flow and mix against specification requirements
- Use EDM to survey structure pre, during and post curing to enable digital comparison within 3D environment. Looking for elastic / plastic state of material throughout the process

Modules Assembled at Works

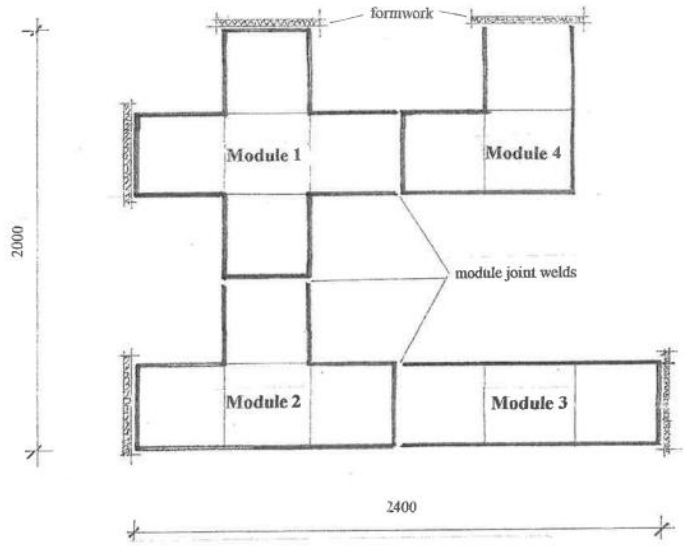

Module Configuration

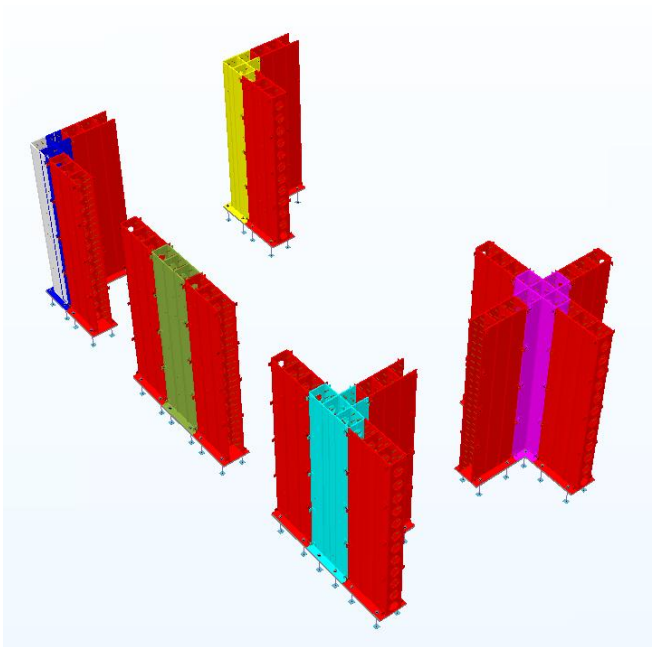

Module 1

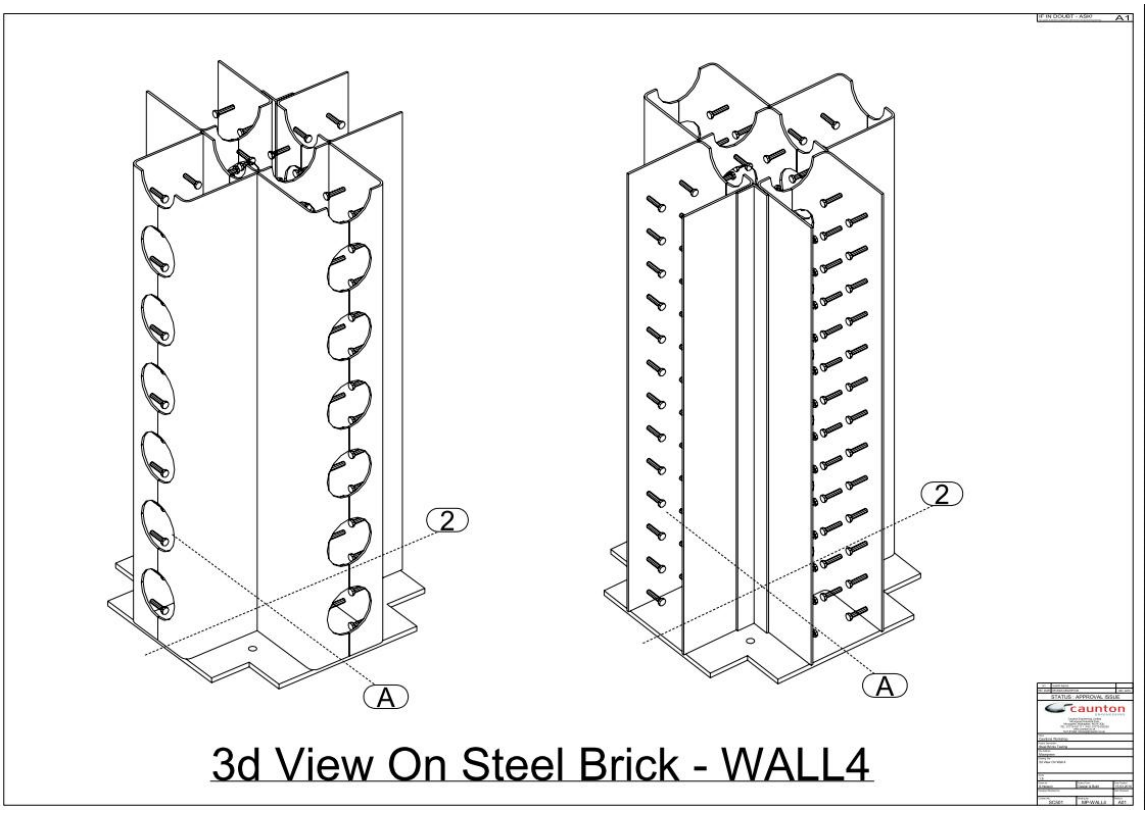

Module 2

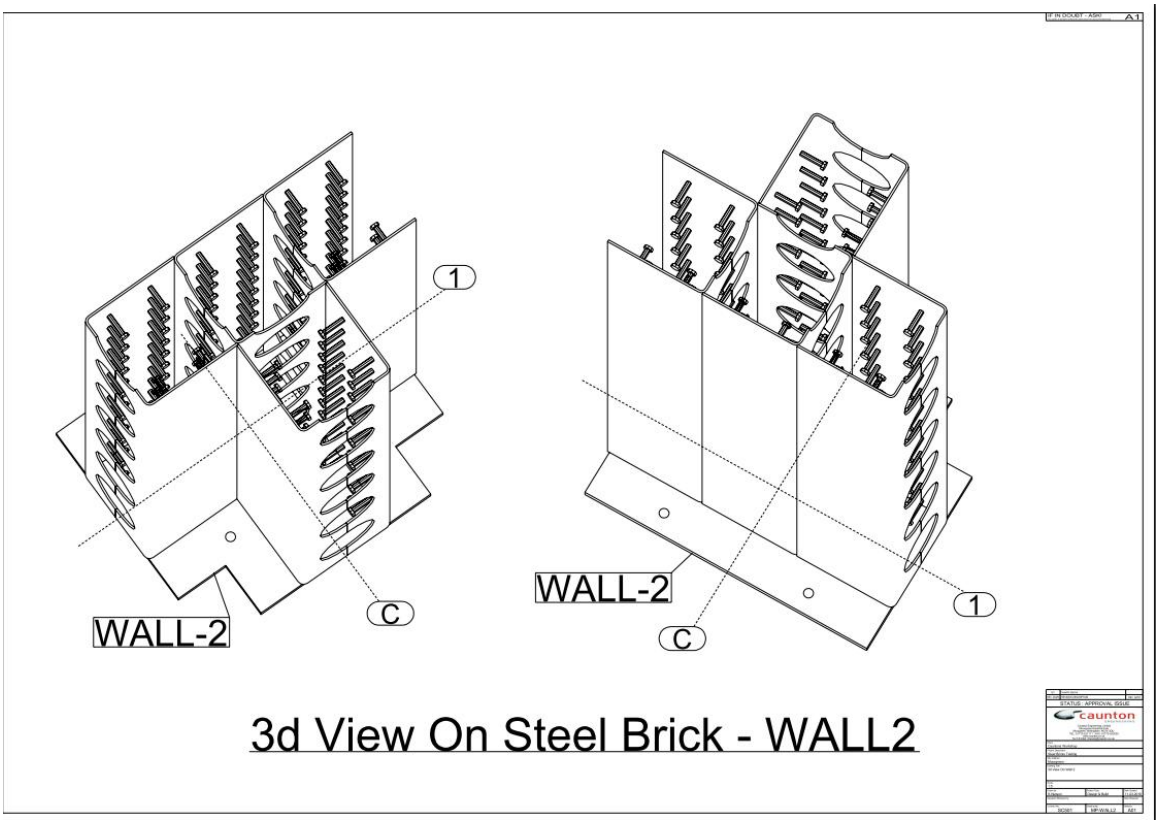

Module 3

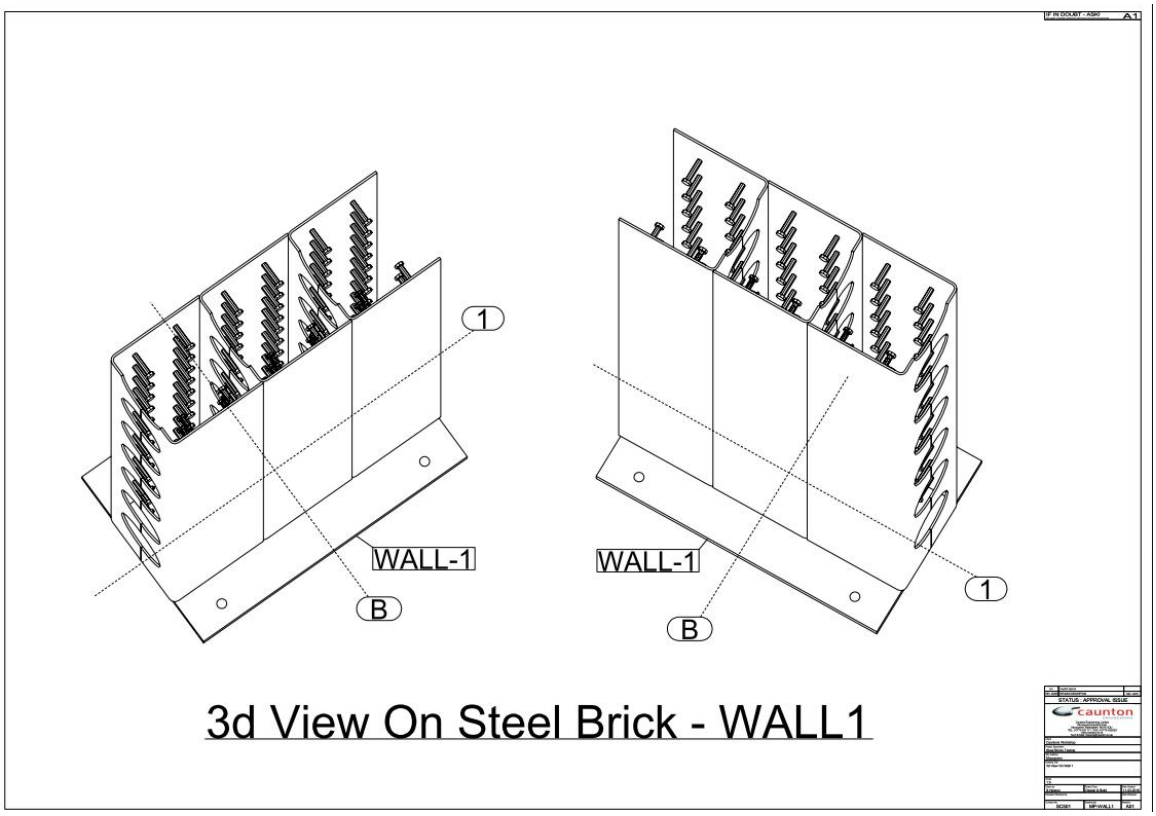

Module 4

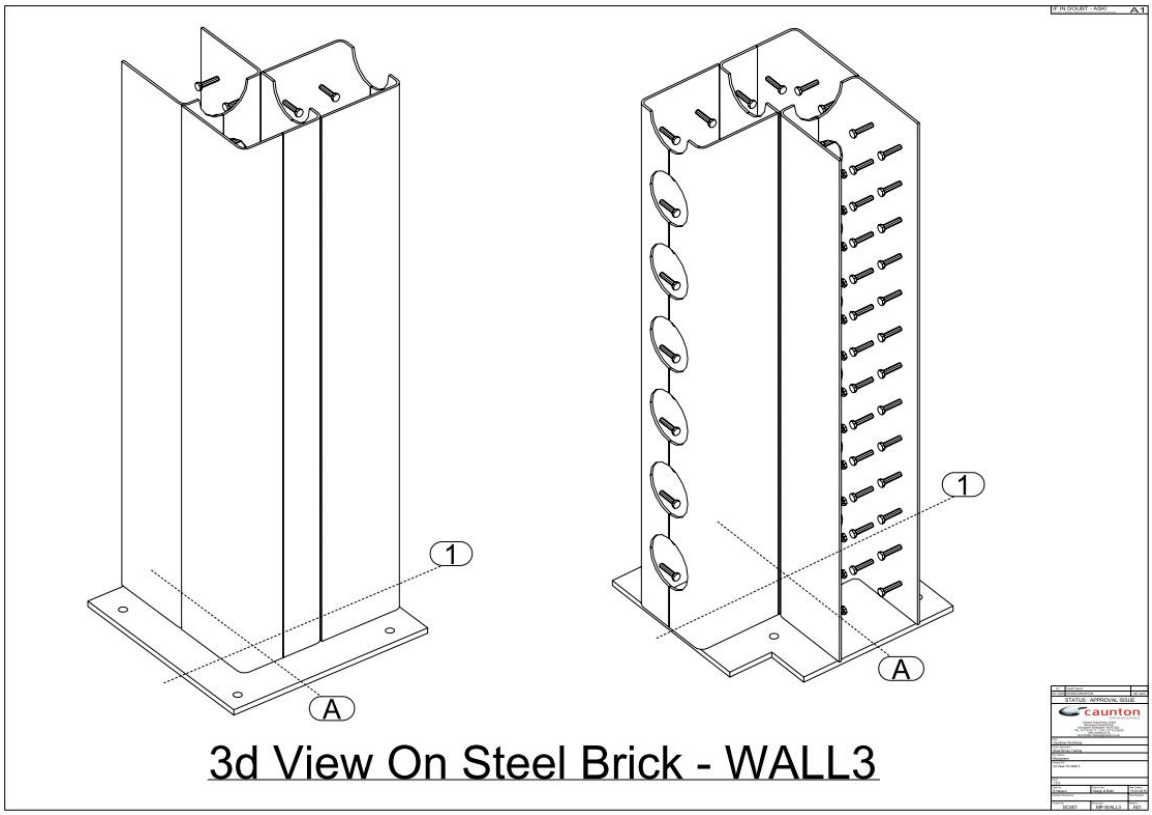

MWS - University Testing (Purdue), Brief Summary

The objective of Modular Walling System (MWS) Testing Program is to experimentally evaluate the out-of-plane shear strength of SC beams with their specific steel inner plate details and compare using equations provided in design codes: (i) AISC N690 for steel-plate composite (SC), (ii) ACI 349 for reinforced concrete (RC) structures, and (iii) Eurocode 2.

The test objective was achieved by conducting out-of-plane bending tests on unit widths of the typical SC design configuration. Unit widths are defined by the transverse spacing between the SC beam shear reinforcement (diaphragm plates). The diaphragm plates were located at the center of the unit widths, and each diaphragm plate had the appropriate size and number of shear studs associated with it.

The out-of-plane shear test was conducted by subjecting each specimen to monotonically increasing loads at two load points. The magnitudes at the two loading points were maintained equal (within tolerance of about 5% of the actual load). The applied loading was increased monotonically to failure. Additionally, three to five elastic loading-unloading cycles were conducted in the elastic range of the response. The experimental results included the: (i) applied load – mid-span displacement response of the specimen, (ii) strains measured on faceplates and inner (diaphragm) plates, (iii) rotations measured at load and support locations, (iv) slip measurements between concrete infill and steel faceplates, and (v) monitor and measure the opening of the section due to cracking of the concrete infill.

The test setup and loading frame for conducting these out-of-plane shear tests were used at Bowen Laboratory.

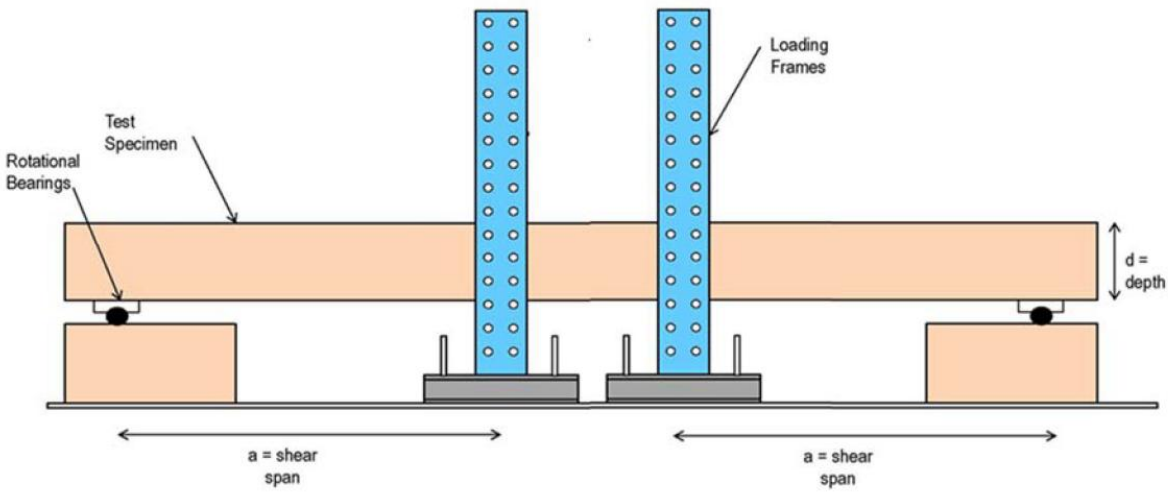

Figure 1 – Out-of-Plane Shear Test Schematic Sketch

The MWS beams consisted of 450mm thick beams with steel faceplates on the exterior surfaces acting as longitudinal reinforcement. The steel faceplates are made from EN 10025-S355J2+n type steel and anchored to the concrete infill using steel headed shear studs. The modules are welded to each other at the bent faceplate corners.

The MWS SC modules have been designed and detailed such that for shear span ratios less than or equal to 2.0, shear strength of the wall sections will be the governing limit state, and the section will have shear failure when subjected to out-of-plane loading. For the designed specimens, the calculated out-of-plane flexural strength is greater than the corresponding out-of-plane shear strength, and the interfacial shear strength is also greater than the out-of-plane shear strength, setting up the desired hierarchy (out-of-plane shear failure governing) of limit states and failure modes for the SC beams.

Two SC beam specimens were designed that are representative of wall strips taken in vertical and horizontal directions. Figures below show side and section views including the stud and diaphragm plate layout for the two MWS SC wall specimens, namely TYPE 1 and TYPE 2. Table 1 summarizes and compares the relevant geometric parameters for the two MWS SC beam specimens.

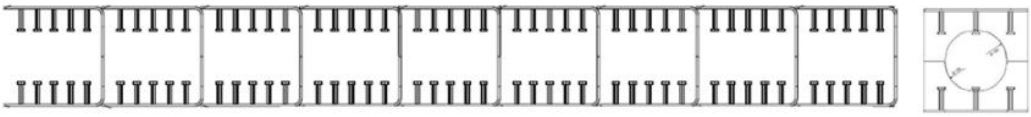

Figure 2 –MWS-Type1 – Side View and Section View

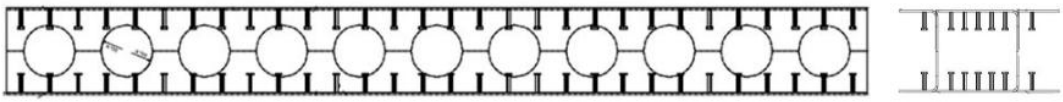

Figure 3 –MWS-Type2 – Side View and Section View

Table 1 – Specimen Dimensions

Dimensions	MWS-Type 1 mm (in)	MWS-Type2 mm (in)
Specimen Width	450 (17.7)	900 (35.4)
Specimen Depth (Wall Thickness)	450 (17.7)	450 (17.7)
Thickness of concrete	430 (16.9)	430 (16.9)
Thickness of faceplate	10 (0.39)	10 (0.39)
Thickness of diaphragm (inner) plate	10 (0.39)	10 (0.39)
Spacing of inner-plates	440 (17.3)	N/A
Transverse spacing of studs	150 (5.91)	150 (5.91)
Longitudinal spacing of studs	150 (5.91)	150 (5.91)
Specimen Length	4060 (159)	4500 (177)
Radius of inner-plate holes	135 (5.31)	135 (5.31)

A mix design for normal weight - ¾ inch max. aggregate size concrete was used, and the test day compressive strength for TYPE 1 and TYPE 2 were 4294 psi and 4329 psi, respectively. The measured yield strength of the steel plates was 60.2 ksi.

Figures below indicate the relationship between the shear loading and the mid-span deflection during the experiment with pointing out critical events for concrete cracking and faceplate yielding. The figures also indicate the calculated code strengths from ACI 349 and AISC N690 codes using the measured material properties.

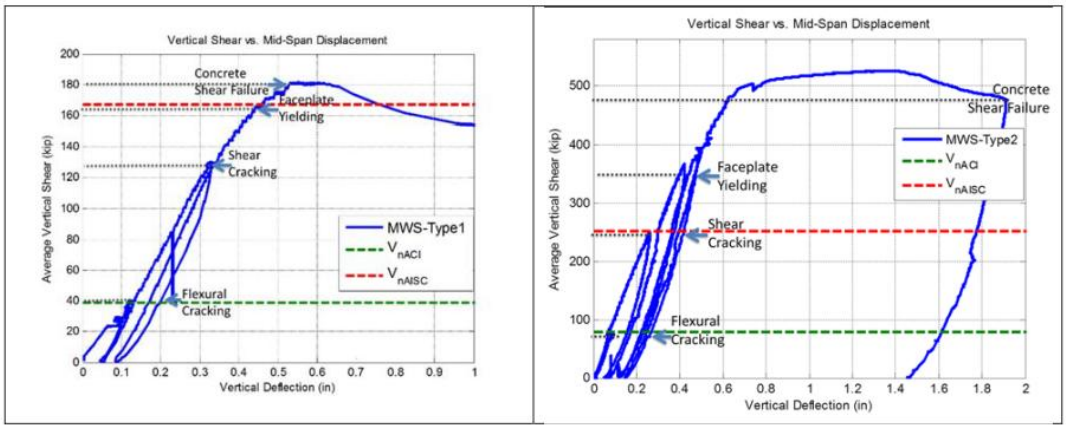

a) Type1 **b) Type2**

Figure 4 –Force - Displacement Response of Tested Specimens and Comparison with Code Equations

As shown in Figure 4a, for Specimen Type 1, the initial flexural cracking occurred at about 40 kips, and first inclined shear cracking was observed at 130 kips. The first initiation of flexural-shear cracking occurred at loads approximately equal to 2-2.5 √f' c ×A c . The yield strain (ε y) of the plate sections is 2076 micro-strain (i.e., 60.2 ksi/29000 ksi), which the strain gages on the bottom plate near mid-span reached when the applied shear was at about 160 kips and then exceeded this level with increasing load. Since no significant yielding was observed on the specimen faceplates, the failure was due to dense and wide diagonal cracks in concrete. The diagonal cracks widened at a faster rate after the yielding of inner plates, which resulted in concrete compression strut failure that eventually caused loss of load capacity of the beam specimen.

For Specimen Type 2, shown in Figure 4b, the initial cracking occurred at about 100 kips, and further inclined shear cracking occurred at 250 kips. The first initiation of flexural-shear cracking occurred at loads approximately equal to 1.0-1.25 √f' c ×A c . The strain gages on the bottom plate near mid-span reached when the applied shear was at about 350 kips and then exceeded this level with increasing load.

Since significant yielding was also observed in the faceplates, the failure mode was flexure-shear type where shear failure occurred after the yielding of the steel faceplates. Similar to Specimen Type 1, the diagonal cracks widened at a faster rate after the yielding of the inner plates, which led to the concrete compression strut failure.

The results of the out-of-plane test program indicate that both specimens exceeded the nominal shear strength calculated using the code design equations using the material properties measured on the day of testing. Table 2 below show the comparisons between the nominal shear strength equations (i.e. ACI 349, AISC N690 and Eurocode2) and the experimental strength of the specimens: The comparisons indicate large safety margins when compared with ACI 349 and AISC N690, especially for Specimen Type 2. Eurocode 2 equations predict the experimental strengths of the tested specimens more accurately but still conservatively.

Table 2 –Summary of Test Results

Specimen	MWS-Type1	MWS-Type2
V_{exp} **(kip)**	180	520
V_{exp} / V_n^{ACI349}	4.60	6.62
$V_{exp} / V_n^{AISC-690}$	1.08	2.06
$V_{exp} / V_n^{Eurocode2}$	1.20	1.03

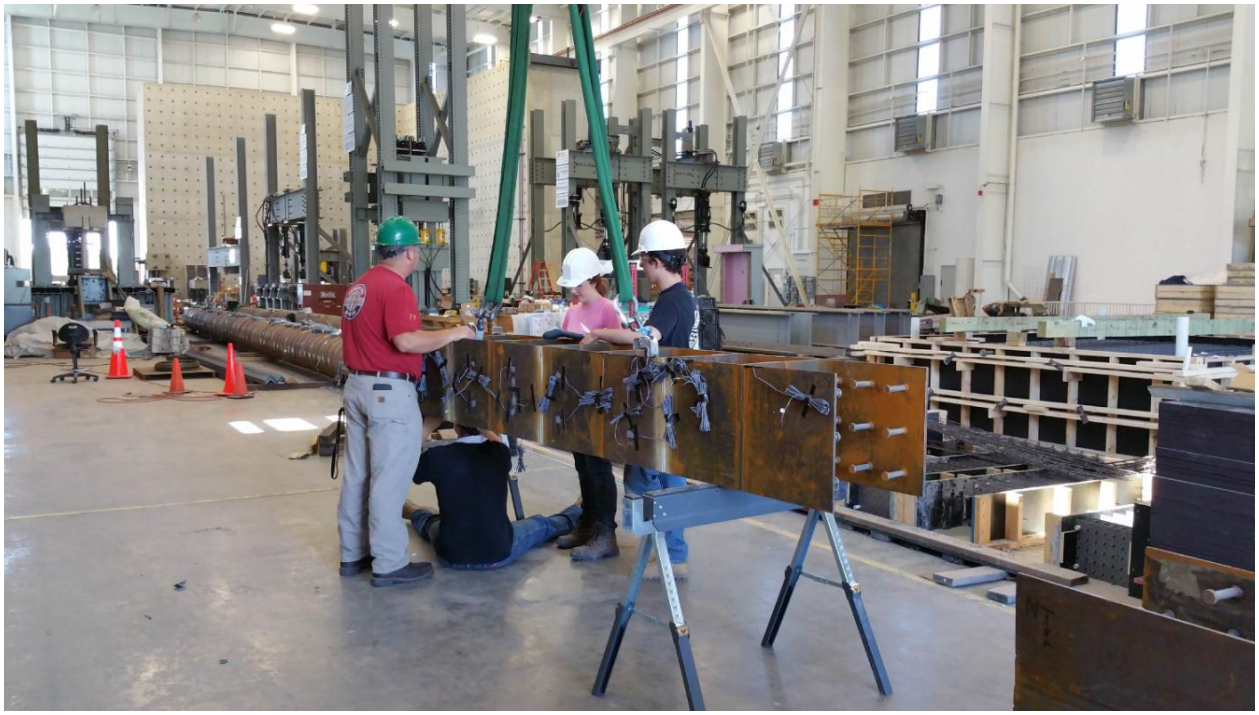

Diagonal Shear Failure in the North Shear Span (East Face)

Diagonal Shear Failure in the North Shear Span (West Face

Conclusion

The results of the out-of-plane test program indicate that both specimens exceeded the nominal shear strength calculated using the code design equations using the material properties measured on the day of testing. Table 2 below show the comparisons between the nominal shear strength equations (i.e. ACI 349, AISC N690 and Eurocode2) and the experimental strength of the specimens: The comparisons indicate large safety margins when compared with ACI 349 and AISC N690, especially for Specimen Type 2. Eurocode 2 equations predict the experimental strengths of the tested specimens more accurately but still conservatively.

Table 2 –Summary of Test Results

Specimen	MWS-Type1	MWS-Type2
$V_{\exp}$ **(*kip*)**	180	520
$V_{\exp} / V_n^{ACI\,349}$	4.60	6.62
$V_{\exp} / V_n^{AISC-690}$	1.08	2.06
$V_{\exp} / V_n^{Eurocode2}$	1.20	1.03

WP 7 - Concreting of SteelBrick Walls and Floors

The SteelBrick for the different type of connection details and joint configurations were assembled on site. The open ends were shuttered to prevent the loss of concrete and also to determine that the flow of the concrete distributed correctly in the joints.


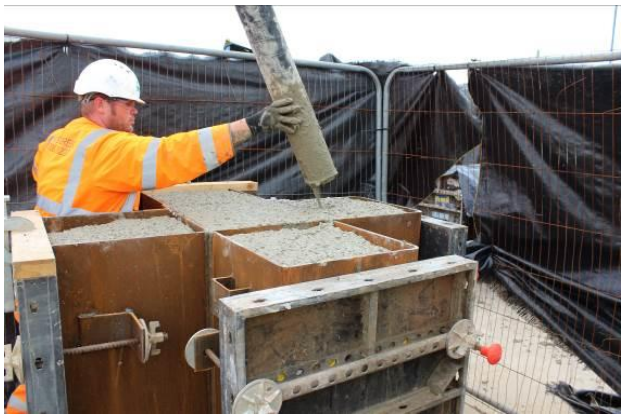



Work Package 7 Dismantling Concrete Structures

In this work package we have reviewed methods of dismantling the SteelBrick Technology. Trialling different RAMS on the samples will enable easier dismantling of the final structure.

One method we tried was a pecker/breaker to crush the concrete in the SteelBrick, then gas or plasma cut the steel into smaller sections for recycling.

Please see photo below for evidence on this method

We explored alternatives in the industry and employed East Midlands Diamond drilling to wire saw the SteelBrick in one operation. This process would also allow us to inspect the concrete to ensure that it had consolidated uniformly throughout the cross section of the SteelBrick.

The process and methodology of the Diamond Wire sawing is to core drill a 40mm diameter hole at the base of the SteelBrick, and then the diamond wire is threaded through the SteelBrick and connected to the sawing machine which saws in both vertical and horizontal positions.

Please see the photographs and video of this operation.

Core Drilling the SteelBrick

Concrete removed from the core drilling operation for inspection

Section Through the SteelBrick after the cutting process

WP 8 – Refine the Approach to Design, Detailing, Fabrication, Concreting and Dismantling

This report is the deliverable of Work Package 8 (WP8) of this Innovate UK project.

A summary is presented of the findings of previous work packages regarding the design of SteelBrick (such as material grade and appropriate range of plate thicknesses).
WP8 defines the methodology required for a detailed design of a section of the diesel generator building in WP9.

The objective of this WP is to use the results of the preliminary design and fabrication/concreting/erection trials to refine and define work required in the subsequent stages of the project in respect of the detailed design and fabrication/construction of scaled section of a diesel generator building.
The tasks are:

- to refine building design and define detailed design methodology
- to refine fabrication, erection and concreting methods

WP 9 – Detailed design of diesel generator building

Elastic analysis of a simplified frame based on the diesel generator structure as given in WP2 is performed in OASYS GDA equivalent properties for the elements. Combinations of actions include gravity, imposed and wind actions. Design of the foundation, vertical SteelBrick members, horizontal SteelBrick members and connections between them have been carried out following current design procedures in the Eurocodes, supplemented as necessary by design checks from AISC .

The objective of this WP is to perform a detailed design of a part of the diesel generator building taking into account lessons learnt from the fabrication, testing and concreting workshop trials. Overall sizes of the SteelBrick elements in their composite form was decided following initial design in WP2 which took into consideration combinations of actions including seismic and thermal actions. Sizing of the plate thickness at 10 mm was determined by concrete pressures in the construction stage. A detailed design of a section of the structure of the diesel generator building, which is to be built as shown in Section 1.2, has been carried out. Elastic analysis of this structure is performed in OASYS GDA by specifying equivalent properties for the elements. Combinations of actions include gravity, imposed and wind actions. Design of the foundations, vertical SteelBrick members, horizontal SteelBrick members and connections between them have been carried out following current design procedures in the Eurocodes supplemented as necessary by rules in AISC.

WP10 – Prepare BIM / 3D Model of the building & Prepare Detailed Fabrication Drawings

The objective is to create the Tekla 3D BIM model that will be used to prepare detailed fabrication drawings for issue to manufacture, material lists, CNC manufacturing data, fabrication drawings, erection plans, planned erection sequence and foundation plans. This model will also be used as a point of reference during the onsite construction and post construction in the dissemination phase of the project.

We have taken the information provided by the SCI in WP1, 2, 8 & 9 which has enabled us to commence the 3D modelling, detailing and connecting the Sample Diesel Generator Building using the SteelBrick Technology. We have incorporated the Roller Shutter Door opening to the outside and to an inner wall for access and concrete flow tests.

The model below shows working progress at the time of writing the report.

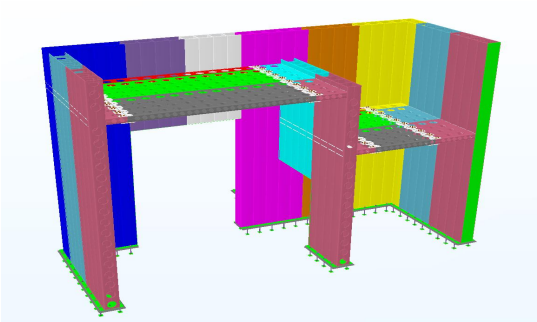

Front Section View of the Building

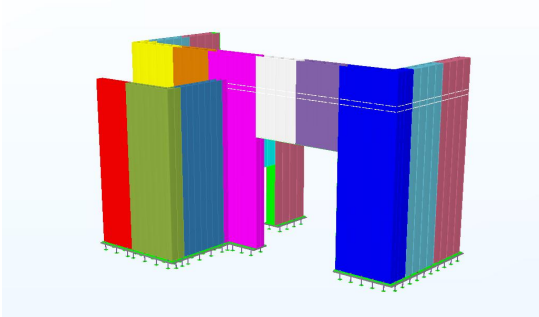

Rear View of the Building

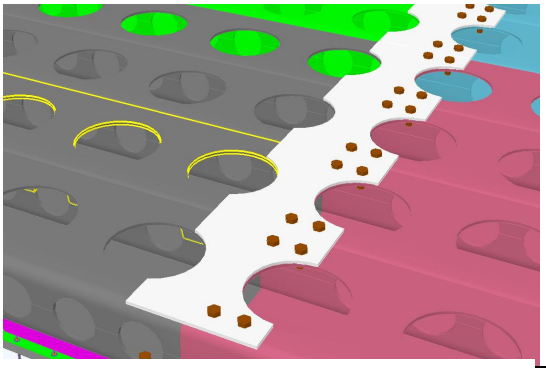

Section View of the top of the floor splice detail

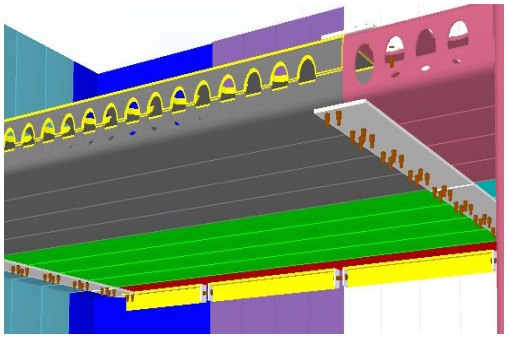

Section View of the bottom floor splice detail and the Temporary Erection tolerance seating angles

WP12 – Prepare Construction Site and Build Foundations

We have prepared the site and foundations for the Sample Building and foundations for the SteelBrick samples we have previously made in WP3, 4 & 8; these will be used for WP14 when we conduct Site Visits and Presentations.

We commenced this work package ahead of the original programme date, as part of the site inspection and dissemination of the project we have decided to bring some of the samples back from the test locations so that these can be viewed during the Site Visits and Presentation to the Stakeholders (fabricators, contractors, reactor vendors, nuclear site operatives) for WP14.

Site Clearance Progress for Sample Building Erection and Concreting

WP14 – Presentation Samples in readiness for site visits